CTI 2564 FOUR CHANNEL
PULSE TRAIN OUTPUT MODULE
INSTALLATION AND OPERATION GUIDE
Version 1.5

CTI Part #062-00140

Copyright © 2005 Control Technology Inc.
All rights reserved.

This manual is published by Control Technology Inc., 5734 Middlebrook Pike, Knoxville, TN 37921. This manual contains references to brand and product names which are tradenames, trademarks, and/or registered trademarks of Control Technology Inc. Siemens® and SIMATIC® are registered trademarks of Siemens AG. Other references to brand and product names are tradenames, trademarks, and/or registered trademarks of their respective holders.

DOCUMENT DISCLAIMER STATEMENT

Every effort has been made to ensure the accuracy of this document; however, errors do occasionally occur. CTI provides this document on an "as is" basis and assumes no responsibility for direct or consequential damages resulting from the use of this document. This document is provided without express or implied warranty of any kind, including but not limited to the warranties of merchantablility or fitness for a particular purpose. This document and the products it references are subject to change without notice. If you have a comment or discover an error, please call us toll-free at 1-800-537-8398.

PREFACE

This Installation and Operation Guide provides installation and operation instructions for the CTI 2564 Four Channel Pulse Train Output Module for SIMATIC® 505 programmable controllers. We assume you are familiar with the operation of SIMATIC® 505 programmable controllers. Refer to the appropriate SIMATIC® user documentation for specific information on the SIMATIC® 505 programmable controllers and I/O modules.

This Installation and Operation Guide is organized as follows:

Chapter 1 provides a description of the module.

Chapter 2 covers installation and wiring.

Chapter 3 is a guide to troubleshooting.

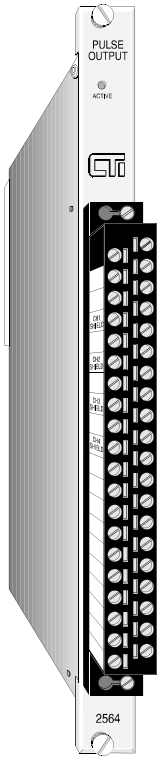

Figure 1 *The 2564 Four Channel Pulse Train Output Module*

USAGE CONVENTIONS

NOTE:
Notes alert the user to special features or procedures.

CAUTION:
Cautions alert the user to procedures which could damage equipment.

WARNING:
Warnings alert the user to procedures which could damage equipment and endanger the user.

TABLE OF CONTENTS

PREFACE iii

USAGE CONVENTIONS v

TABLE OF FIGURES ix

CHAPTER 1. DESCRIPTION 1
- 1.1 Front Panel Description 1
  - Active LED 2
  - Output Connector for Channels 1-4 3
- 1.2 Asynchronous Operation 3

CHAPTER 2. INSTALLATION 7
- 2.1 Planning the Installation 7
  - Calculating the I/O Base Power Budget 7
  - Wiring Consideration 8
- 2.2 Unpacking the Module 8
- 2.3 Installing the Module 9
- 2.4 Wiring the Output Connector Assembly 9
  - TTL Output Drive 10
  - Open Collector Output 10
- 2.5 Inserting the Screw Terminal Connector 11
- 2.6 Checking Module Operation 12

CHAPTER 3. TROUBLESHOOTING 13

SPECIFICATIONS 15

LIMITED PRODUCT WARRANTY 17

REPAIR POLICY 19

TABLE OF FIGURES

Figure 1 *The 2564 Four Channel Pulse Train Output Module* iii
Figure 2 *Front Panel Description* 2
Figure 3 *Relation of Update Time Change in Signal Output* 3
Figure 4 *Word Output from the PLC to the Module* 4
Figure 5 *Output Signal and Digital Word Relationship* 4
Figure 6 *Example of Change in Output Value* 4
Figure 7 *Output Wiring Connector* 9
Figure 8 *Pulse Output Circuit* 10
Figure 9 *Open Collector Output* 10
Figure 10 Output Connector Assembly 11
Figure 11 *I/O Configuration Chart* 12
Figure 12 *Troubleshooting Matrix* 13

CHAPTER 1. DESCRIPTION

The CTI 2564 Four Channel Pulse Train Output Module is a member of the Control Technology Inc. (CTI) family of Input/Output (I/O) modules for SIMATIC® 505 programmable controllers. The Model 2564 is designed to provide four TTL (0-5 VDC) level or "open collector" square wave outputs to be used in motion control applications such as a speed reference input for an inverter drive. Other voltage levels may be supported such as open collector output by special product quotation.

Call CTI 1-800-537-8398 for specific requests.

1.1 Front Panel Description

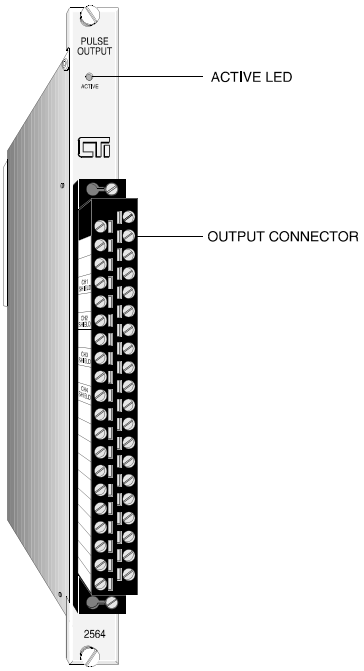

Figure 2 *Front Panel Description*

1.1.1 Active LED

The Active LED will be illuminated when the module is functioning normally. If the Active LED is not lit, refer to Chapter 3 for troubleshooting.

1.1.2 Output Connector for Channels 1-4

This connector provides wiring terminals for channels 1-4.

1.2 Asynchronous Operation

The module operates asynchronously with respect to the PLC so that a scan of the PLC and a module output scan cycle do not occur at the same time. Note also that how an output signal changes is dependent on the update time of the module. The following figure illustrates this relationship.

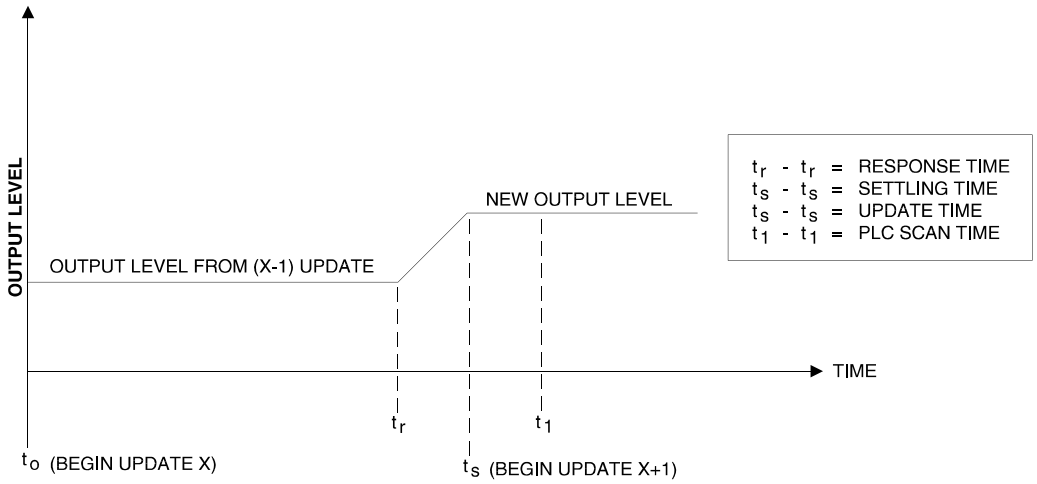

Figure 3 *Relation of Update Time Change in Signal Output*

Each of the four channels provides output signals ranging from 1 to 65,535 Hz at 0.4 to 5.5 VDC.

The PLC sends a 16-bit word to the module for translation to a pulse signal. Data to be translated occupies 16 bits. The following figure illustrates a 16 bit word sent from the PLC to the module.

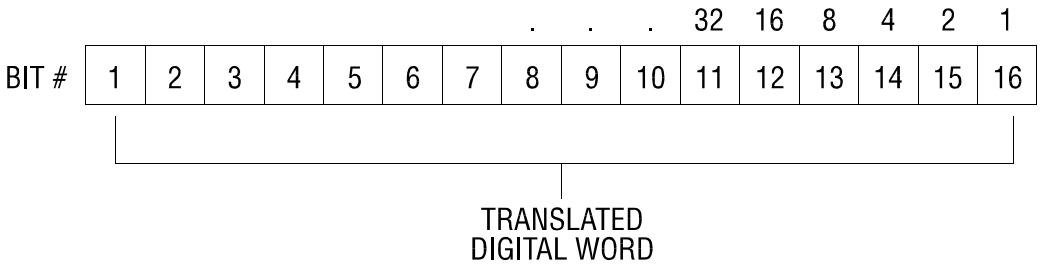

Figure 4 *Word Output from the PLC to the Module*

The module has a resolution of 1 count out of 65535. For a pulse range of 1 to 65,535Hz, the minimum step is 1 Hertz. The following figure illustrates the relationship between output pulse and the digital word.

Digital Word (WY) = Pulse (Hz)

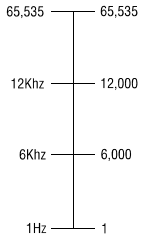

Figure 5 *Output Signal and Digital Word Relationship*

The following example illustrates the effects of a change in output level:

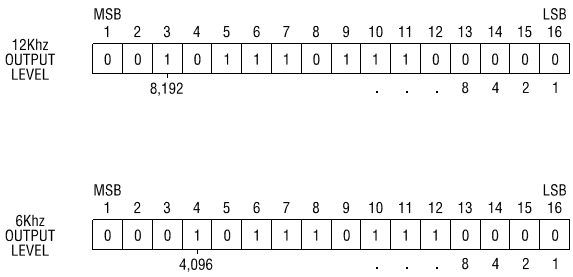

Figure 6 *Example of Change in Output Value*

CHAPTER 2. INSTALLATION

The installation of the CTI 2564 Four Channel Pulse Train Output Module involves the following steps:

1. Planning the installation
2. Inserting the module into the I/O base
3. Wiring the module output screw terminal face connector
4. Plugging the front face connector onto the printed circuit card
5. Checking module operation

These steps are explained in detail in the following pages.

2.1 Planning the Installation

Planning is the first step in the installation of the module. Planning the installation involves:

1. Calculating the I/O base power budget
2. Routing the wiring to minimize noise
3. Selecting the proper wiring method for the type of output you will use

The following sections discuss each of these aspects of the installation.

2.1.1 Calculating the I/O Base Power Budget

The Model 2564 requires 2.0 watts of +5 VDC power from the I/O base. Before inserting the module into the I/O base, ensure that the base power supply capacity is not exceeded.

2.1.2 Wiring Consideration

Power and signal wiring must be separated to prevent noise in the signal wiring. Output signal wiring must be shielded, twisted-pair cable, with 18 to 22 gauge stranded conductors. The cable shield should always be terminated at the output connector. Use the following guidelines when wiring the module:

Always use the shortest possible cables

Avoid placing power supply wires and signal wires near sources of high energy

Avoid placing low voltage wire parallel to high energy wire (if the two wires must meet, cross them at a right angle)

Avoid bending the wire into sharp angles

Use wireways for wire routing

Be sure to provide a proper earth ground for the cable shield at the I/O base

Avoid placing wires on any vibrating surfaces

CAUTION:
HANDLING STATIC SENSITIVE DEVICES
The components on the Model 2564 module printed circuit card can be damaged by static electricity discharge. To prevent this damage, the module is shipped in a special anti-static bag. Static control precautions should be followed when removing the module from the bag, when opening the module, and when handling the printed circuit card during configuration.

2.2 Unpacking the Module

Open the shipping carton and remove the special anti-static bag which contains the module.

After discharging any static build-up, remove the module from the static bag. Do not discard the static bag. **Always use this bag for protection against static damage when the module is not inserted**

WARNING:
Ensure that the power supply is turned off before connecting the wires to the I/O base.

into the I/O backplane.

2.3 Installing the Module

Insert the module into the I/O base. When the module is fully seated in the slot, captive screws at the top and bottom will hold the module in place. To remove the module from the I/O base, loosen these captive screws, and then remove the module from the I/O base. Do not damage the socket connector at the back of the module when inserting or removing the module.

2.4 Wiring the Output Connector Assembly

Output signals are provided through the front face connector assembly located on the front of the

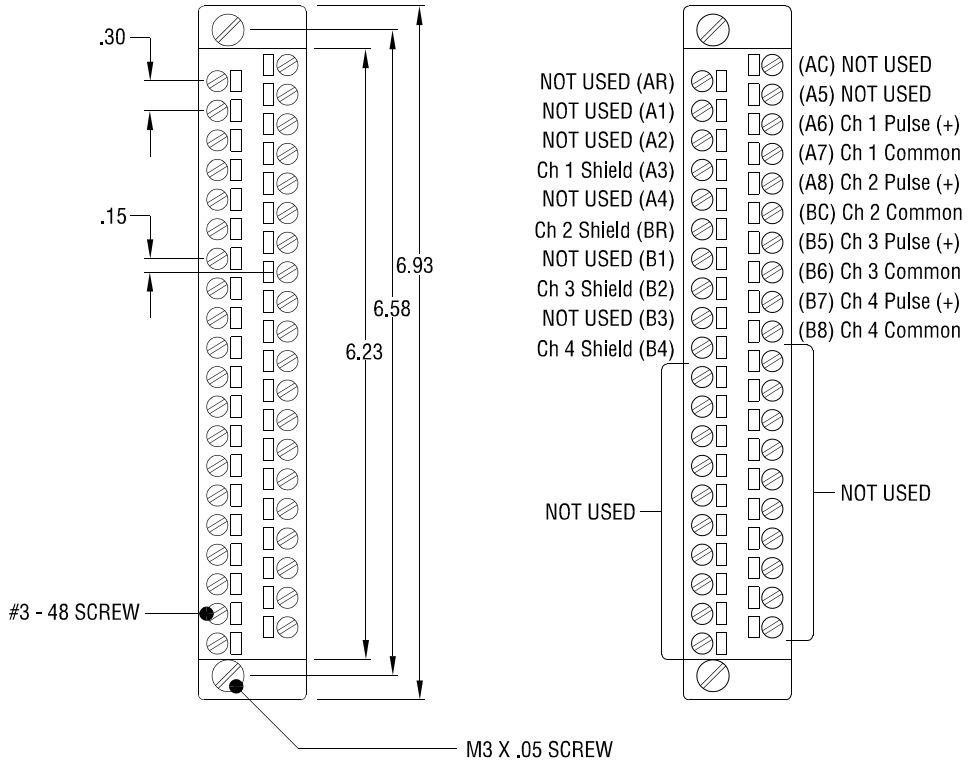

Figure 7 *Output Wiring Connector*

> *NOTE:*
> *Terminals labeled COM and SHIELD are connected to the same ground plane.*

module. The connector assembly consists of a front face connector and captive screws to fasten to the front panel. Wiring is connected to the open slots which are closed by individual captive screws for

each termination.

2.4.1 TTL Output Drive

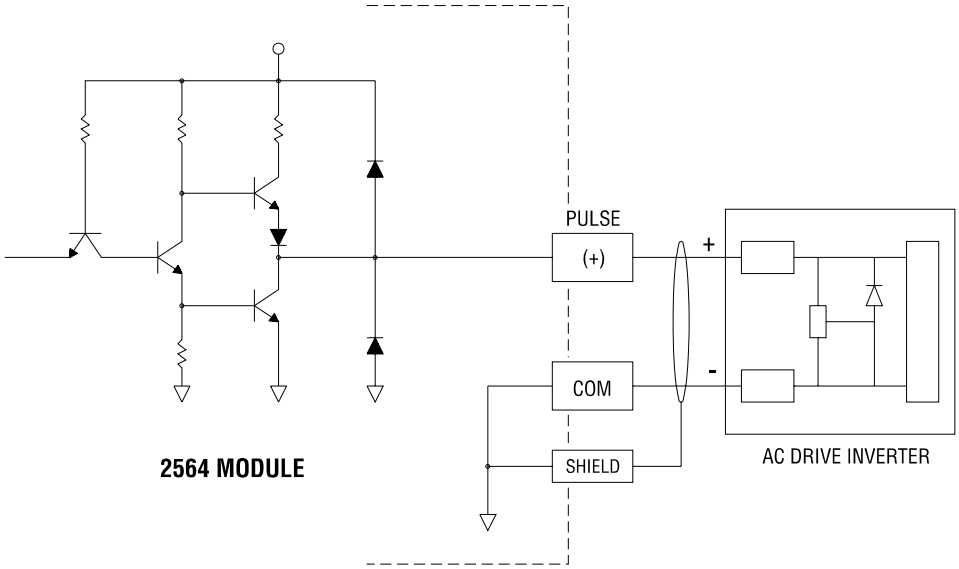

Figure 8 *Pulse Output Circuit*

2.4.2 Open Collector Output

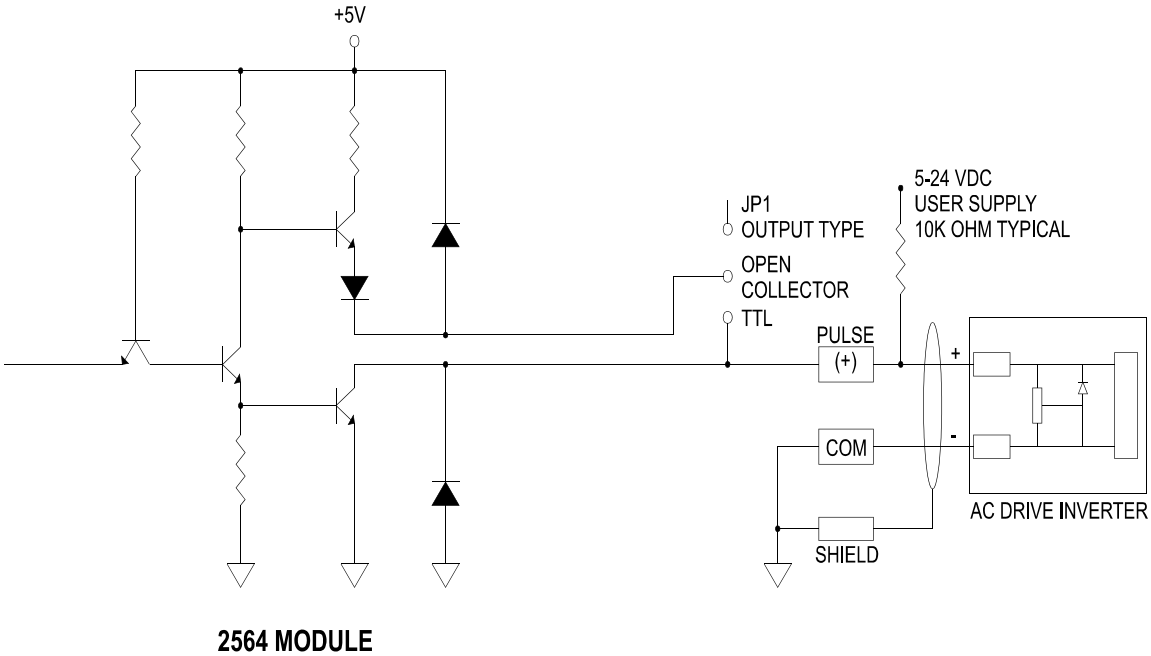

Figure 9 *Open Collector Output*

2.5 Inserting the Screw Terminal Connector

When all the output signal wires are connected to the front face connector, carefully insert the connector onto the PCB. The front face connector can only be installed one way. When the front face connector is fully seated on the PCB, then you fasten the two captive screws into the front panel.

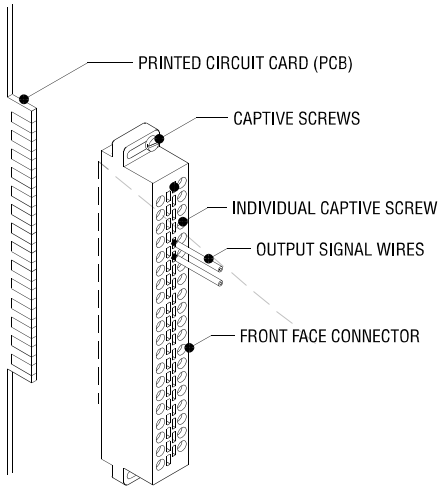

Figure 10 Output Connector Assembly

2.6 Checking Module Operation

First turn on the base power supply. If the diagnostics detect no problems, the front panel status indicator will light. If the indicator does not light (or goes out during operation), the module has detected a failure. For information on viewing failed module status, refer to your SIMATIC® TISOFT Programming Manual. To diagnose and correct a module failure, refer to the next section on troubleshooting.

You must also check that the module is configured in the memory of the PLC. This is important because the module will appear to be functioning regardless of whether it is communicating with the PLC. To view the PLC I/O configuration chart listing all slots on the base and the inputs or outputs associated with each slot, refer to your SIMATIC® TISOFT Programming Manual. An example chart is shown in the following figure.

In this example, the 2564 module is inserted in slot 1 on I/O base 0. Data for channel 1 appears in word location WY1, data for channel 2 appears in word location WY2, etc. For your particular module, look in the chart for the number corresponding to the slot occupied by the module. If four output word memory locations appear on this line, then the module is registered in the PLC memory and the module is ready for operation.

I/O MODULE DEFINITION FOR CHANNEL . . . . . 1 BASE 00

I/O SLOT	ADDRESS	X	Y	WX	WY	SPECIAL FUNCTION
01	0001	00	00	00	**08**	NO
02	0002	00	00	00	00	NO
.	.	.	.	.	.	.
.	.	.	.	.	.	.
.	.	.	.	.	.	.
15	0000	00	00	00	00	NO
16	0000	00	00	00	00	NO

Figure 11 *I/O Configuration Chart*

If the line is blank or erroneous, re-check the module to ensure that it is firmly seated in the slots. Generate the PLC I/O configuration chart again. If the line is still incorrect, contact your local distributor or CTI at 1-800-537-8398 for further assistance.

CHAPTER 3. TROUBLESHOOTING

If the module provides improper readings or the status indicator is not on, use the following chart to determine the appropriate action.

SYMPTOM	PROBABLE CAUSE	CORRECTIVE ACTION
Indicator is not lit	Base power is off	Turn base or PLC on
Incorrect outputs	Wrong connections	Trace wiring to check connections
	Wrong addresses for word output	Check program for correct word output addresses
	Not logged-in	Read I/O configuration

Figure 12 *Troubleshooting Matrix*

When it is inconvenient to visually check the status indicator, use the TISOFT "Display Failed I/O" or "Show PLC Diagnostics" support functions.

If after consulting the chart above, you are unable to diagnose or solve the problem, contact your local distributor or CTI at 1-800-537-8398 for further assistance.

SPECIFICATIONS

Output Channels:	Four Channel TTL Pulse Train Or “Open Collector” Outputs (Square Wave)
Response Time:	16 milliseconds all four channels
Output Drive Capabilities:	TTL: High (VOH) (minimum) 3.5 V at 16 mA Low (VOL) (maximum) 0.4 V at 60 mA Rise/Fall Time <200 microseconds OPEN COLLECTOR: 5-24 VDC user supply with external resistor To sink < 60 mA 10KΩ typical
Resolution:	1 Hertz
Isolation:	1500 VDC channel-to-PLC
Maximum Sinked Current:	60 mA at 0.4 V per channel
Load Resistance:	10 TTL loads per channel
Range:	1-65,535 Hz
Output Accuracy:	+/- 1 Hertz
User Supply:	Not required
Backplane Power Consumption:	2 Watts at +5 VDC
Module Size:	Single wide
Operating Temperature:	0˚ to 60˚C (32˚ to 140˚F)
Storage Temperature:	-40˚ to 85˚C (-40˚ to 185˚F)
Humidity, relative:	5% to 95% non-condensing
Agency Approvals:	UL, UL Canada
Agency Approvals Pending:	FM Class 1 Div 2

Specifications subject to change without notice.

LIMITED PRODUCT WARRANTY

CTI warrants that this CTI Industrial Product shall be free from defects in material and workmanship for a period of one (1) year after purchase from CTI or from an authorized CTI Industrial Distributor. This CTI Industrial Product will be newly manufactured from new and/or serviceable used parts which are equal to new in the Product.

Should this CTI Industrial Product fail to be free from defects in material and workmanship at any time during this one (1) year warranty period, CTI will repair or replace (at its option) parts or Products found to be defective and shipped prepaid by the customer to a designated CTI service location along with proof of purchase date and associated serial number. Repair parts and replacement Product furnished under this warranty will be on an exchange basis and will be either reconditioned or new. All exchanged parts or Products become the property of CTI. Should any Product or part returned to CTI hereunder be found by CTI to be without defect, CTI will return such Product or part to the customer.

This warranty does not include repair of damage to a part or the Product resulting from: failure to provide a suitable environment as specified in applicable Product specifications, or damage caused by an accident, disaster, acts of God, neglect, abuse, misuse, transportation, alterations, attachments, accessories, supplies, non-CTI parts, non-CTI repairs or activities, or to any damage whose proximate cause was utilities or utility like services, or faulty installation or maintenance done by someone other than CTI.

Control Technology Inc. reserves the right to make changes to the Product in order to improve reliability, function, or design in the pursuit of providing the best possible Product. CTI assumes no responsibility for indirect or consequential damages resulting from the use or application of this equipment.

THE WARRANTY SET FORTH ABOVE IN THIS ARTICLE IS THE ONLY WARRANTY CTI GRANTS AND IT IS IN LIEU OF ANY OTHER IMPLIED OR EXPRESSED GUARANTY OR WARRANTY ON CTI PRODUCTS, INCLUDING WITHOUT LIMITATION, ANY WARRANTY OF MERCHANTABILITY OR OF FITNESS FOR A PARTICULAR PURPOSE AND IS IN LIEU OF ALL OBLIGATIONS OR LIABILITY OF CTI FOR DAMAGES IN CONNECTION WITH LOSS, DELIVERY, USE OR PERFORMANCE OF CTI PRODUCTS OR INTERRUPTION OF BUSINESS, LOSS OF USE, REVENUE OR PROFIT. IN NO EVENT WILL CTI BE LIABLE FOR SPECIAL, INCIDENTAL, OR CONSEQUENTIAL DAMAGES.

SOME STATES DO NOT ALLOW THE EXCLUSION OR LIMITATION OF INCIDENTAL OR CONSEQUENTIAL DAMAGES FOR CONSUMER PRODUCTS, SO THE ABOVE LIMITATIONS OR EXCLUSIONS MAY NOT APPLY TO YOU.

THIS WARRANTY GIVES YOU SPECIFIC LEGAL RIGHTS, AND YOU MAY ALSO HAVE OTHER RIGHTS WHICH MAY VARY FROM STATE TO STATE.

REPAIR POLICY

In the event that the Product should fail during or after the warranty period, a Return Material Authorization (RMA) number can be requested verbally or in writing from CTI main offices. Whether this equipment is in or out of warranty, a Purchase Order number provided to CTI when requesting the RMA number will aid in expediting the repair process. The RMA number that is issued and your Purchase Order number should be referenced on the returning equipment's shipping documentation. Additionally, if under warranty, proof of purchase date and serial number must accompany the returned equipment. The current repair and/or exchange rates can be obtained by contacting CTI's main office at 1-800-537-8398.

When returning any module to CTI, follow proper static control precautions. Keep the module away from polyethylene products, polystyrene products and all other static producing materials. Packing the module in its original conductive bag is the preferred way to control static problems during shipment. **Failure to observe static control precautions may void the warranty.** For additional information on static control precautions, contact CTI's main office at 1-800-537-8398.