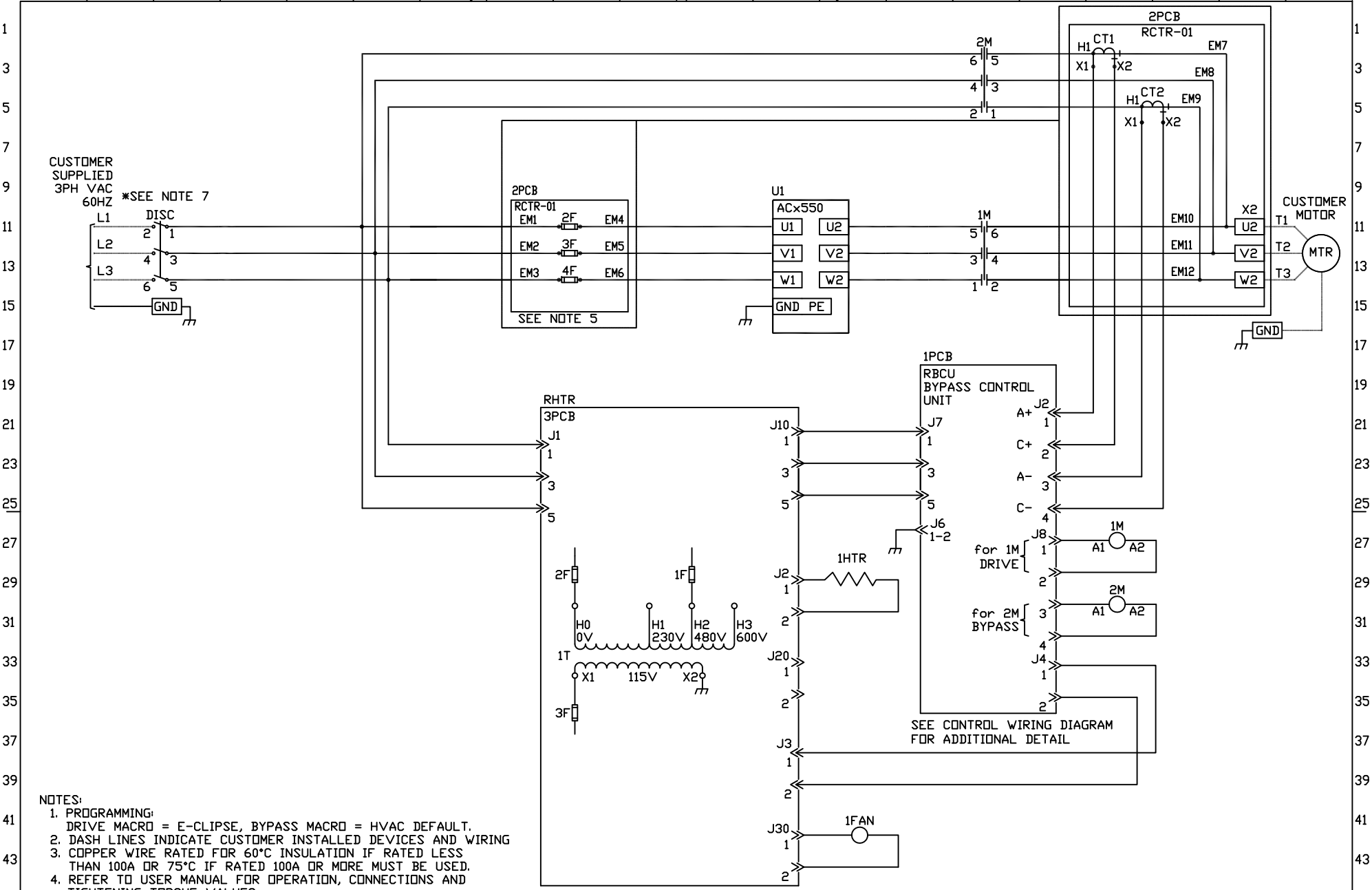

NOTES:

1. PROGRAMMING:
   DRIVE MACRO = E-CLIPSE, BYPASS MACRO = HVAC DEFAULT.
2. DASH LINES INDICATE CUSTOMER INSTALLED DEVICES AND WIRING
3. COPPER WIRE RATED FOR 60°C INSULATION IF RATED LESS THAN 100A OR 75°C IF RATED 100A OR MORE MUST BE USED.
4. REFER TO USER MANUAL FOR OPERATION, CONNECTIONS AND TIGHTENING TORQUE VALUES.
5. FUSE RATING LABEL IS NEAR DEVICE.
6. CUSTOMER REQUIRED TO PROVIDE BRANCH CIRCUIT PROTECTION AND DISCONNECT MEANS PER NEC AND LOCAL CODE.
7. SHORT CIRCUIT CURRENT: 100kA RMS SYMMETRICAL, 480V MAXIMUM WITH REQUIRED FUSES. REFER TO RATING LABEL OR SUBMITTAL SCHEDULE FOR TYPE AND SIZE.
8. TRANSFORMER 1T IS WIRED FOR APPROPRIATE PRIMARY VOLTAGE.

Rev	Description	Date	Appd
L	SEE ECN 10003203	06/23/09	DC

Based On

Description: ACX550 Power Wiring Diagram

Project Name: ACH550 E-CLIPSE BYPASS INPUT DISCONNECT SWITCH

Approved: D.Truettner
Checked: J.Brenner
Prepared: Sch Gen

ABB Inc.

Resp. dept: AJ
Date: 9/19/2007

Reference number: BD00R312PW-A
Document number: 3AUA0000014954

Sheet: A
Cont.: B

We reserve all rights in this document and the information contained therein. Reproduction, use, or disclosure to third parties without express written authority is strictly forbidden. ©2009 ABB Automation Inc. (US)

F-3BUA0980502-M, rev. 0 8-21-03