First angle projection. Original drawing made with Pro/ENGINEER. Set the correct scale factor when adding dimensions after DWG/DXF conversion.

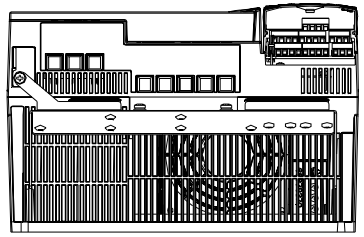

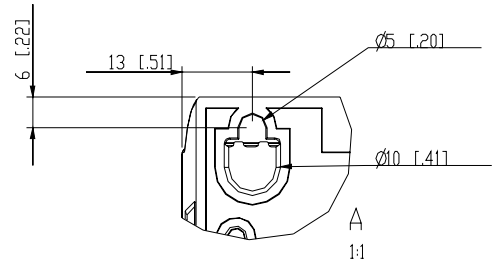

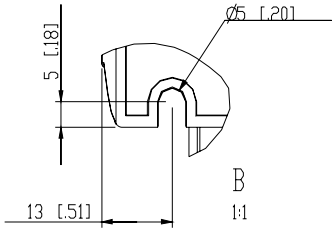

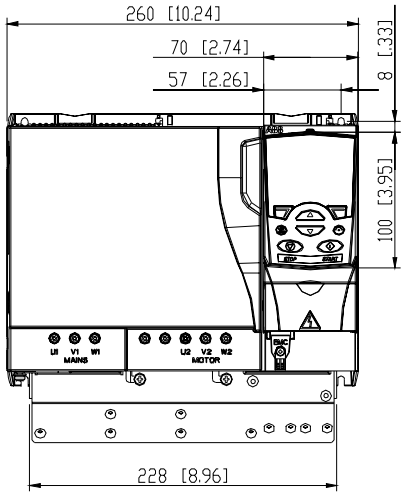

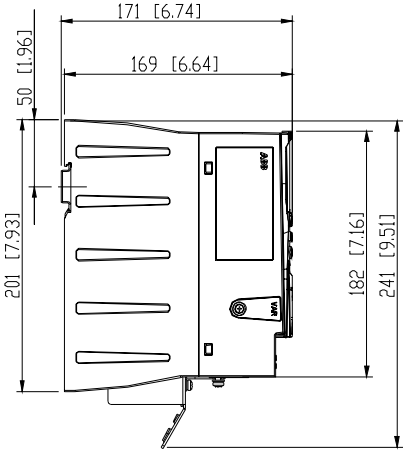

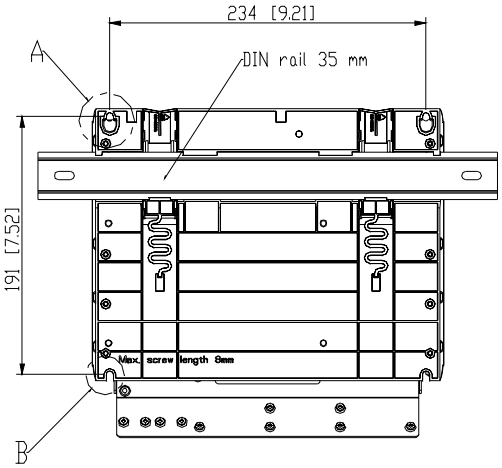

Based on	Prepared	M.PELLIKKA	10-DEC-08	Title	DIMENS. DRAWING	Doc. des.	Scale	Form
Customer	Check.	M.NUPPONEN	10-DEC-08		R4 IP20	DIMENSION DRAWING	1:4	A4
	Appr.	V.PALOJOKI	10-DEC-08		ACS310/320	Resp.dept. EGC	Rev.ind. A (AP)	Lang. EN
Cust. Doc. No.	Project name			ABB DRIVES		Doc. No. 3AUA0000051130		Sheet 1
ABB Ref. No.	Weight kg	5886589.35						Total 1

A	Initial approval	23-Jan-09	M.Pellikka
A.1			
A.1+			

3AUA0000051130
3AUA0000051130 (ASSEM)

We reserve all rights in this document and in the information contained therein. Reproduction, use or disclosure to third parties without express authority is strictly forbidden.
© ABB Oy