First angle projection. Original drawing made with 3D CAD. Set the correct scale factor when adding dimensions after DWG/DXF conversion.

IP55

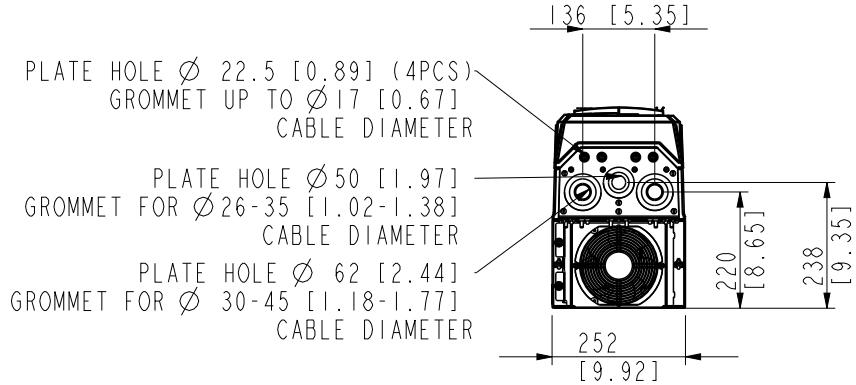

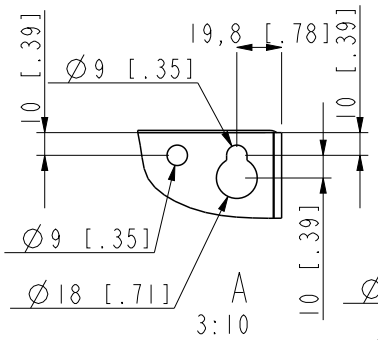

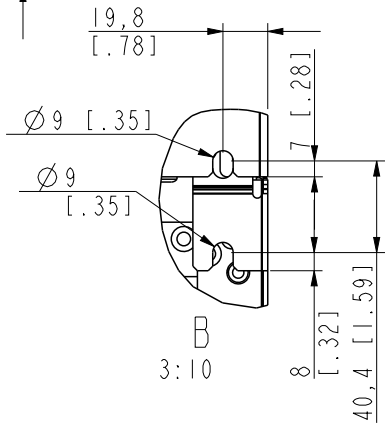

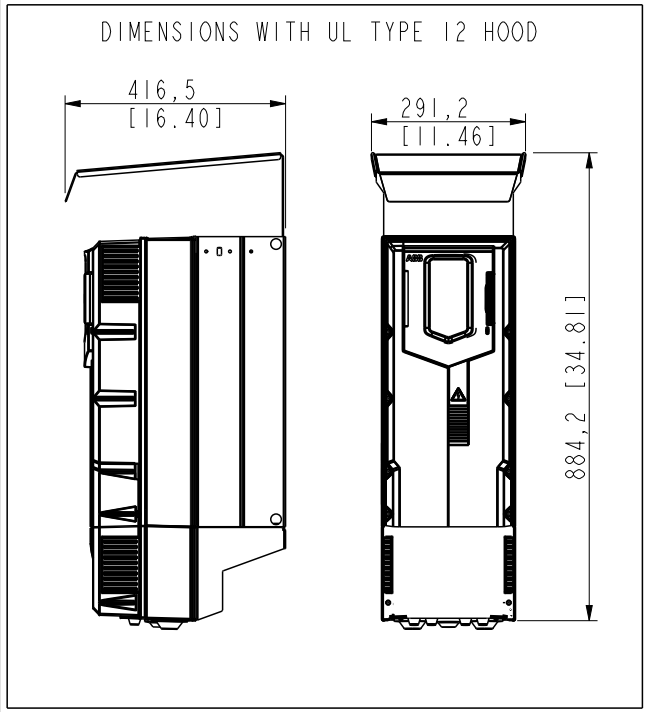

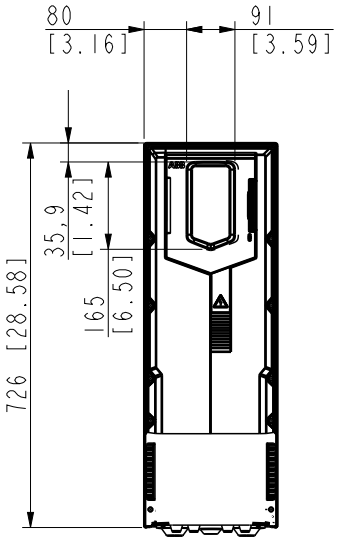

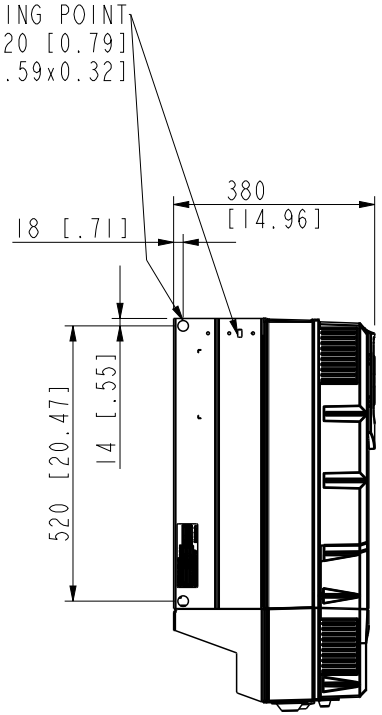

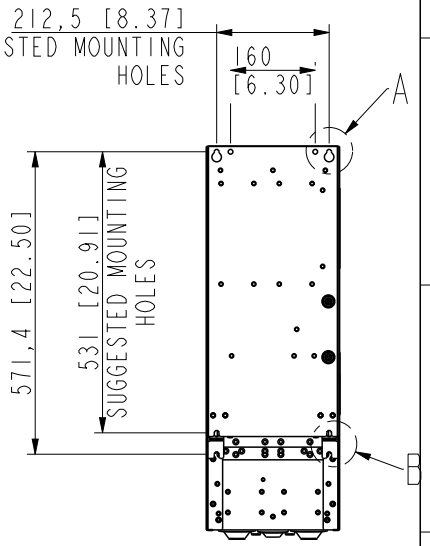

We reserve all rights in this document and in the information contained therein. Reproduction, use or disclosure to third parties without express authority is strictly forbidden. © ABB Oy. PROPRIETARY AND SECRET INFORMATION. CONFIDENTIAL

C	Dimensions Updated	10-Nov-14	J.Ingman	5000006018 04
B	IP 21 sheet deleted	09-Aug-16	A.Piirainen	5000007461 07

3AXD50000016783 C.3+
S6_MAIN_ASSEMBLY (ASSEM) -.128+

Based on	Prepared J.Ingman 29-Oct-14	Title DIMENSION DRAWING	Doc. des. DIMENSION DRAWING	Scale 7:100	Form A4
Customer	Check. J.Savolainen 09-Aug-16	ACX580 R6 DIMENSION DRAWING			
	Appr. J.Viman 09-Aug-16	ACX580 R6	Resp.dept.	Rev.ind. C (AP)	Lang. EN
Cust. Doc. No.	Project name	ABB	Doc. No. 3AXD50000016783		Sheet 1
DMS Number 3AXD10000330667	Weight kg				Total 1