B1K0BTWZ37RKH

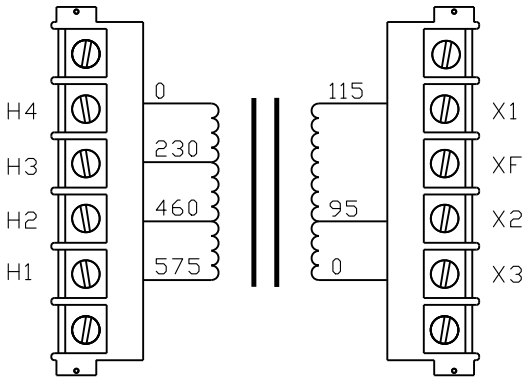

CONNECTION DIAGRAM

RATING: 1000VA 50/60HZ
PRI. 230/460/575 VOLTS
TRIPLE RATED
SEC. 95/115 VOLTS
TEMP.CLASS 180

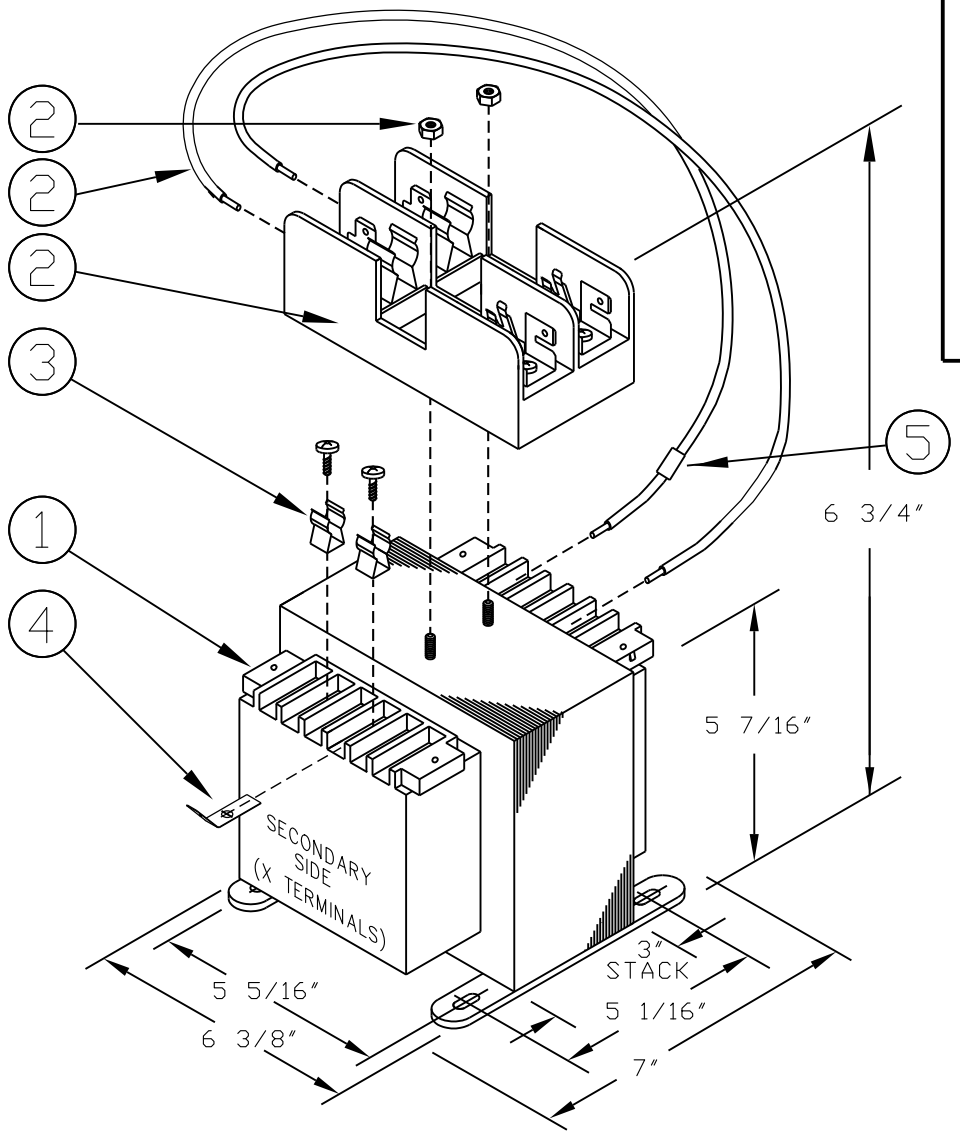

Assembly instructions:

c	INSTALL FUSE BLOCK PER 361-0120
b	INSTALL FUSE CLIPS PER 361-0103
a	APPLY LABELS PER 361-0005

ASSEMBLY Instructions

8	
7	
6	
5	LEAD MARKER "H"
4	QDC TERMINAL
3	TYPE "K" FUSE CLIPS W/JUMPER
2	REJECTION FUSEHOLDER KIT
1	BASE MODEL/COIL 619-0078/419-0078
IT	ITEM DESCRIPTION

See BILL OF MATERIAL for ITEM Quantity and Part Number

FOR TEST REQUIREMENTS SEE COIL TEST PAGE: 419-0078

TREATMENT:
_X_ IMPERV ___ VALU ___ ECON ___ GLOBAL
___ VACUUM IMPREGNANT, TYPE _____
___ OTHER _____

ECL	REVISIONS	BY	DATE
	DRAWING UPDATED	J.V	7/31/13
	ADDED "H" MARKER LABEL	PJA	3/20/10
B	DESIGN REVISED AN002087	J.V	3/14/07
A	NEW	J.V	11/2/05

MICRON CONTROL TRANSFORMER
MICRON INDUSTRIES CORPORATION
1211 W.22nd STREET, Suite 200, OAK BROOK, ILL.
Tel. (800)664-4660, (630)516-1222 Fax (630)516-1820
www.MicronPower.com

DATE	DRAWN	CHECKED	APPROVED
11/2/05	J.G.V.		

RELEASE DATE | CUSTOMER PART NO.

DRAWING NAME: FINAL ASSEMBLY

SIZE: A | SCALE: NONE | B1K0BTWZ37RKH

B-6P-6S

ENG. FILE NAME: FIGURE\44\FUSEBLCK\REJCT\RJP-KJ