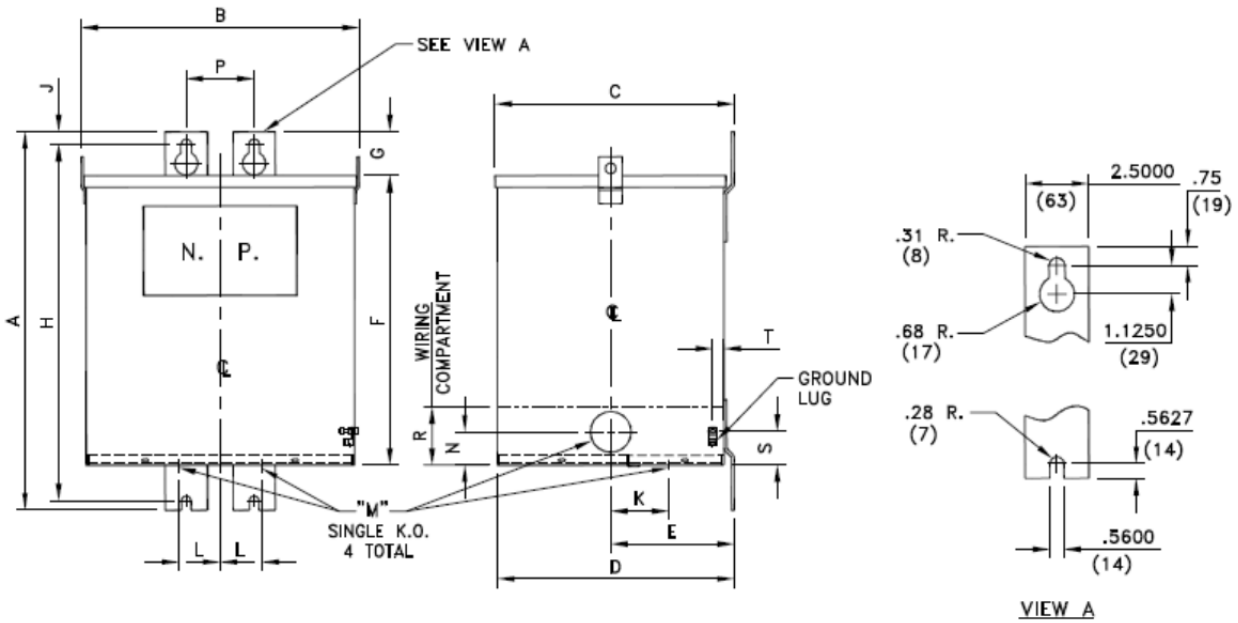

DIMENSIONS IN in(mm)

A	B	C	D	E	F	G	H	J
23.31(592)	16.35(415)	14.12(359)	14.06(357)	7.40(188)	18.06(459)	2.60(66)	22.00(558)	.75(19)
	K	L	M	N	P	R	S	T
	3.44(87)	2.44(62)	2.00 (51)	2.46(62)	4.00(102)	4.44(113)	2.00(51)	.65(17)

WDG	VOLTS	CONNECT	LINE
PRI	480	H2-H3	H1-H4
	240	H1H3-H2H4	
SEC	240	X2-X3	X1-X4
	120	X1X3-X2X4	
	120/240	X2-X3*	X1-X3-X4

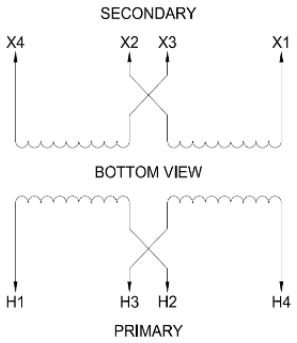

G025K1KF1A03

October 2014