REVISIONS				
Rev	Description	Designer	Approved	Date
01	Created	KTN	KLI	2017-04-04
02	Grounding point info added	KTN	KLI	2017-08-14

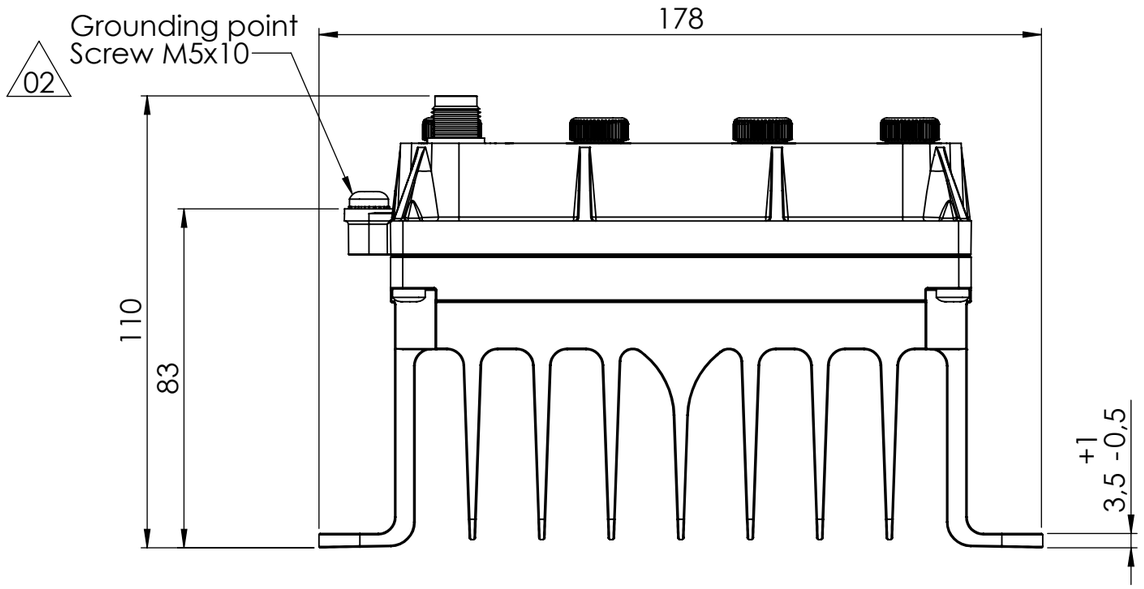

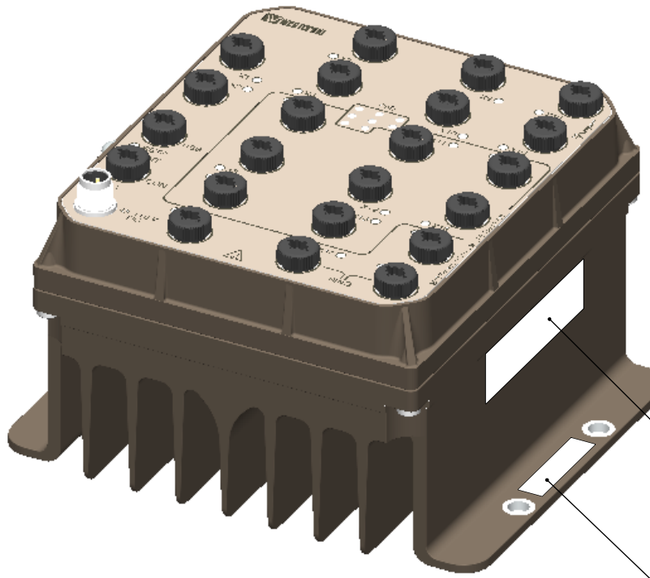

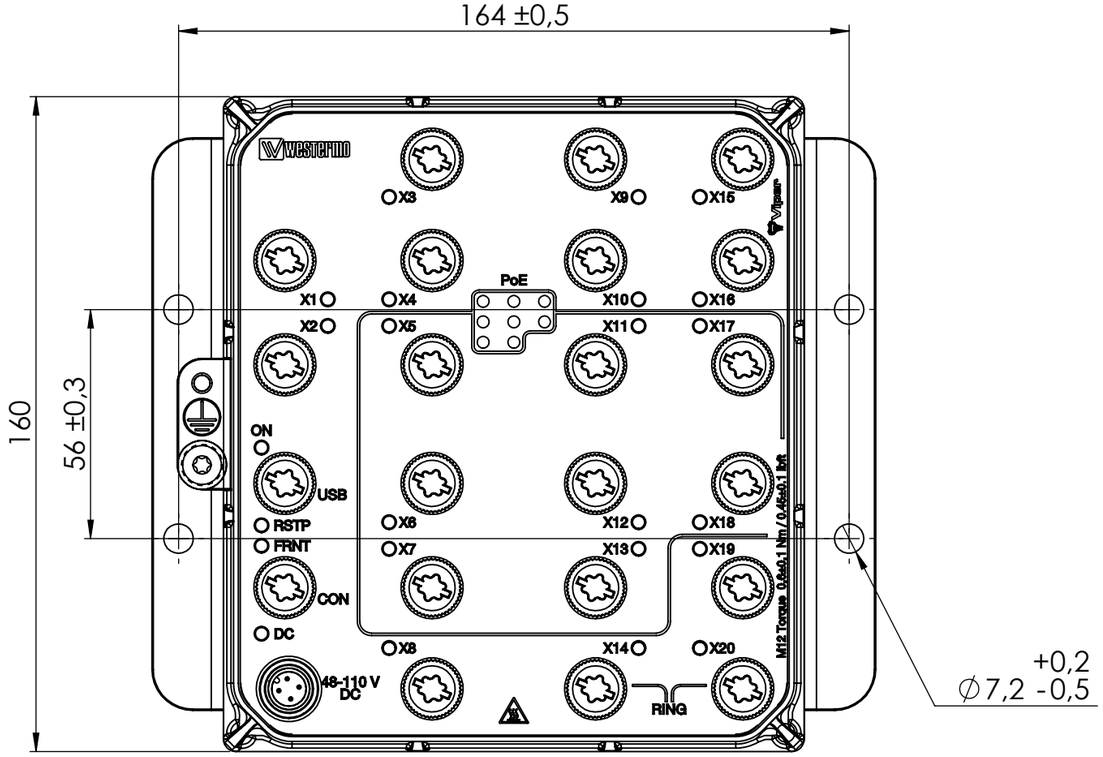

Label: Product name, P/N, S/N, QR-code

Label: P/N, Type, Power, MAC, S/N, QR-code

Units in millimeter (mm)

Material/Notes	Notes	Tolerance ±1,5 mm				
Denomination: Viper-120A-P8-HV		Designer: KTN	Approved: KLI	Date: 2017-04-04	Scale: 2:3	Sheet: 1(1)
		Drawing No.: 3635-1010-UD-02		Status: Approved		

© 2017 WestermoR&D All rights reserved