| REVISIONS | | | | |
|---|---|---|---|---|
| Rev | Description | Designer | Approved | Date |
| 01 | Created | KTN | KLI | 2016-09-26 |
| 02 | DC was PWR | KTN | KLI | 2016-11-17 |
| 03 | Grounding point info added, Tolerances added | KTN | KLI | 2017-08-14 |

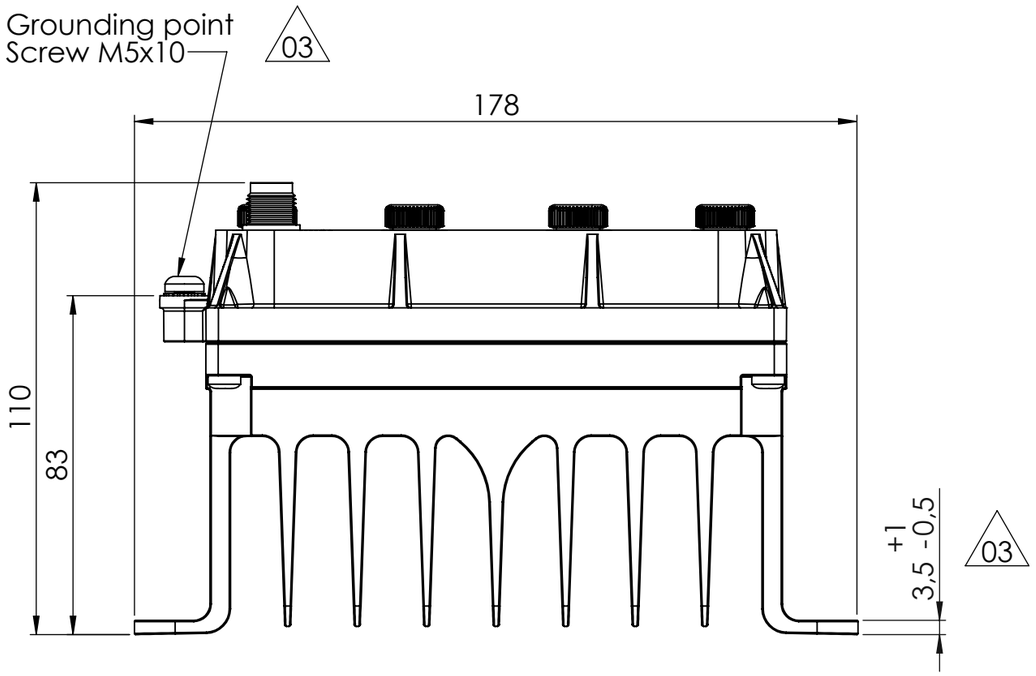


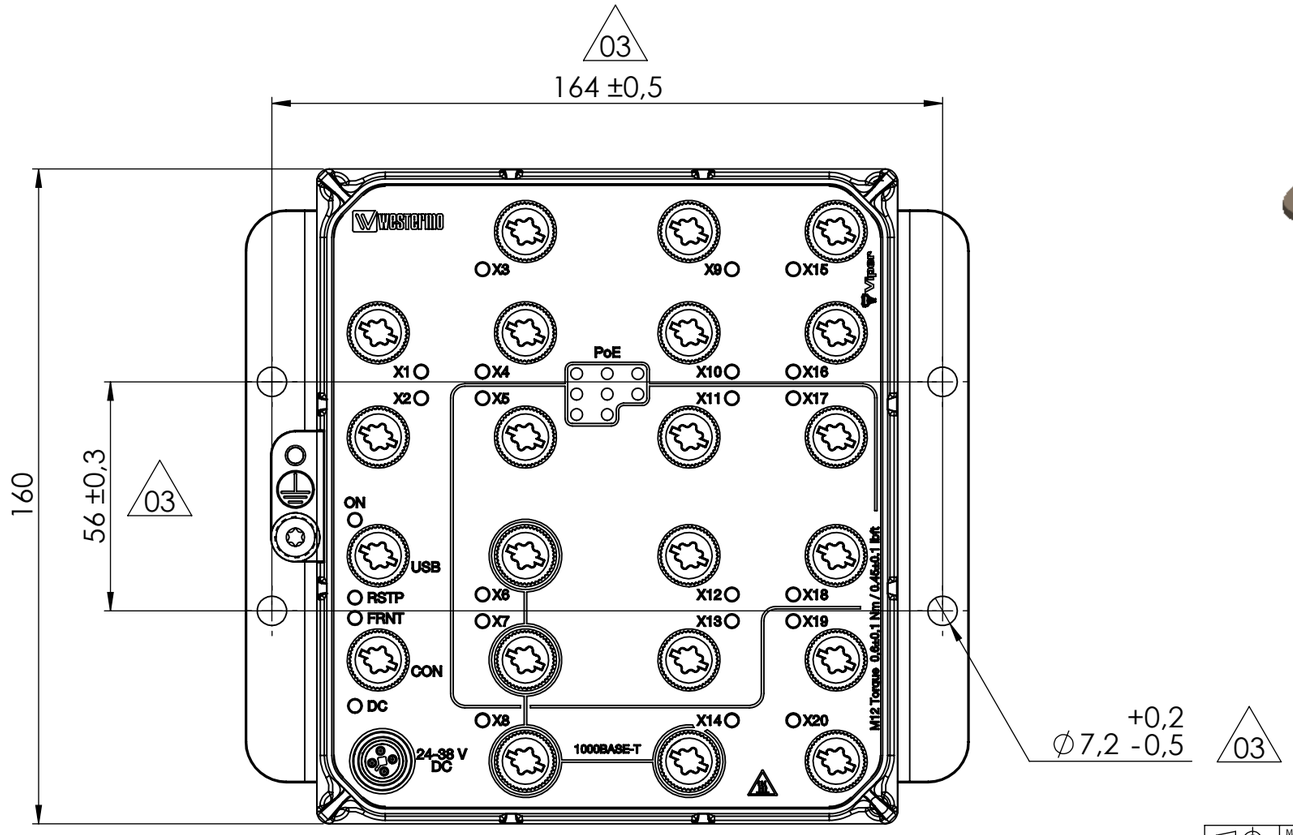


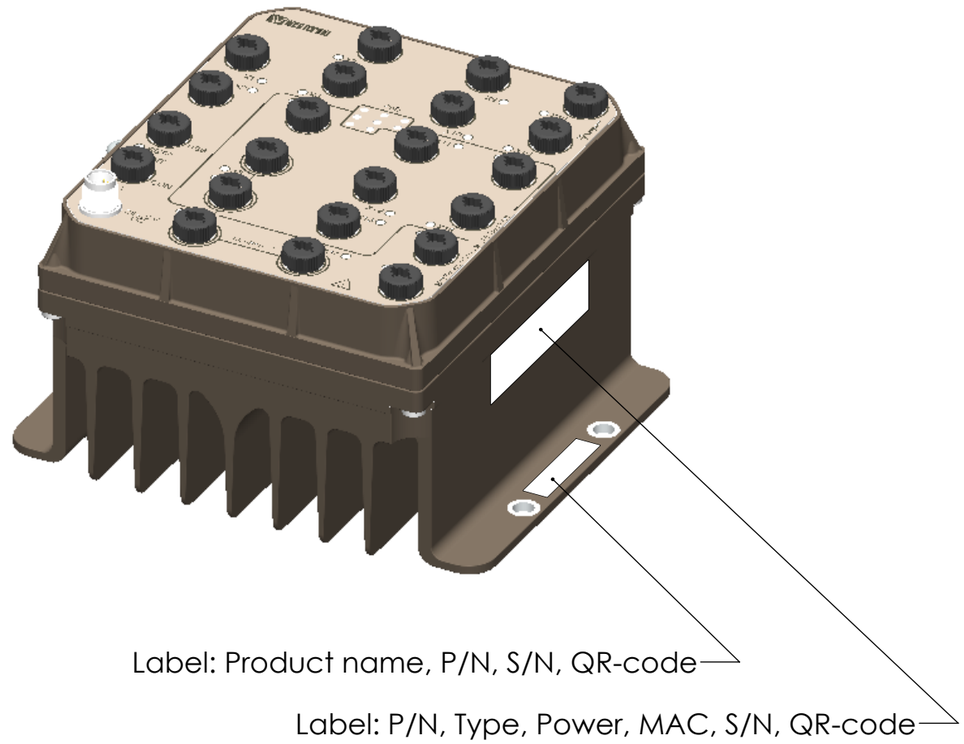


Units in millimeter (mm)

| Material/Notes | Notes | Tolerance ±1,5 mm | | | | |
|---|---|---|---|---|---|---|
| Denomination: Viper 120A -T4G - P8 - LV | | Designer: KTN | Approved: KLI | Date: 2016-09-01 | Scale: 2:3 | Sheet: 1(1) |
| | | Drawing No.: 3635-1310-UD-03 | | | Status: Approved | |

© 2017 WestermoR&D All rights reserved