REVISIONS				
Rev	Description	Designer	Approved	Date
01	Created	KTN	KLI	2016-09-01
02	DC was PWR, Tolerance added	KTN	KLI	2016-11-17
03	Grounding point info added, Tolerances added	KTN	KLI	2017-08-14

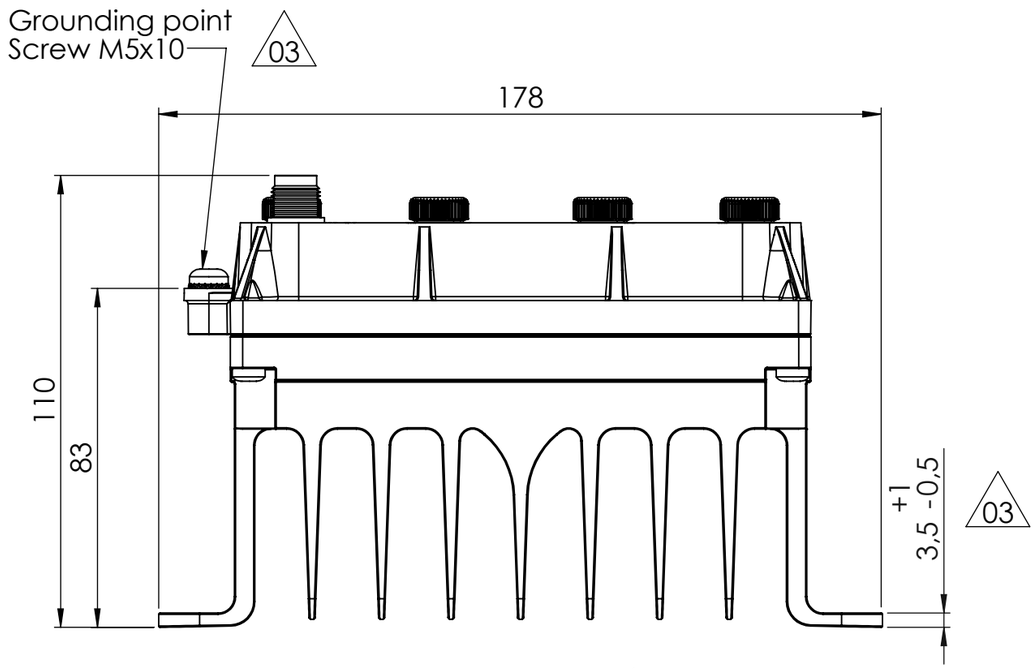

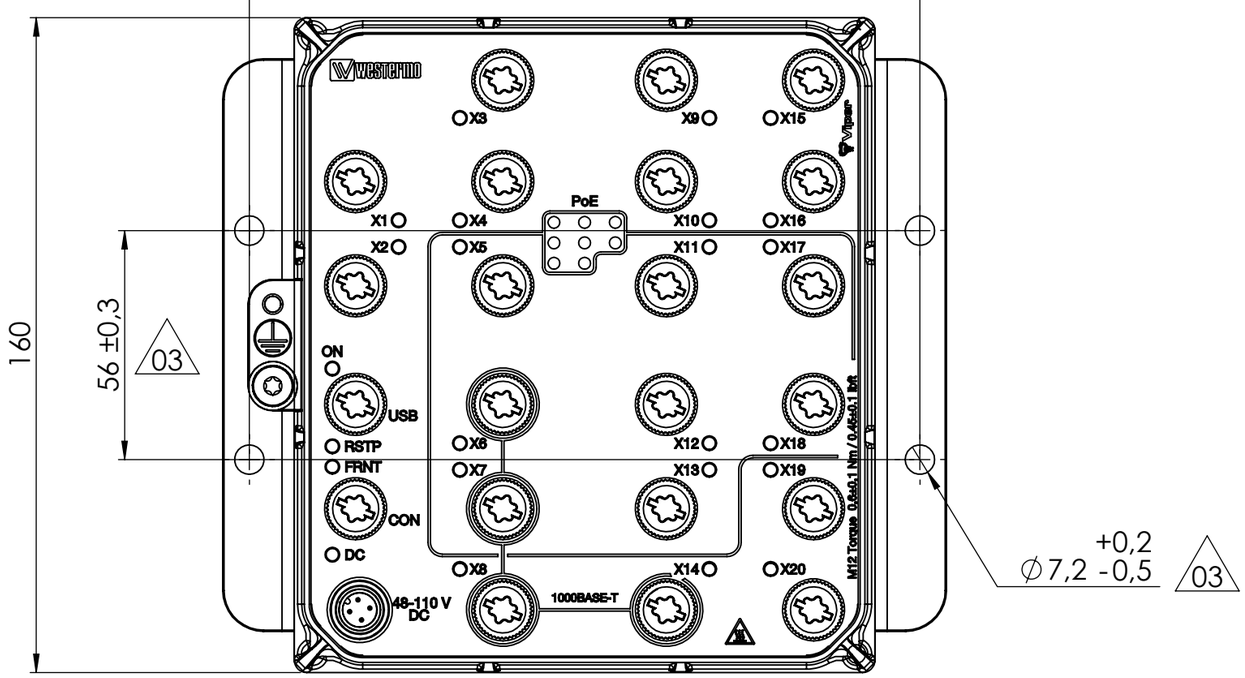

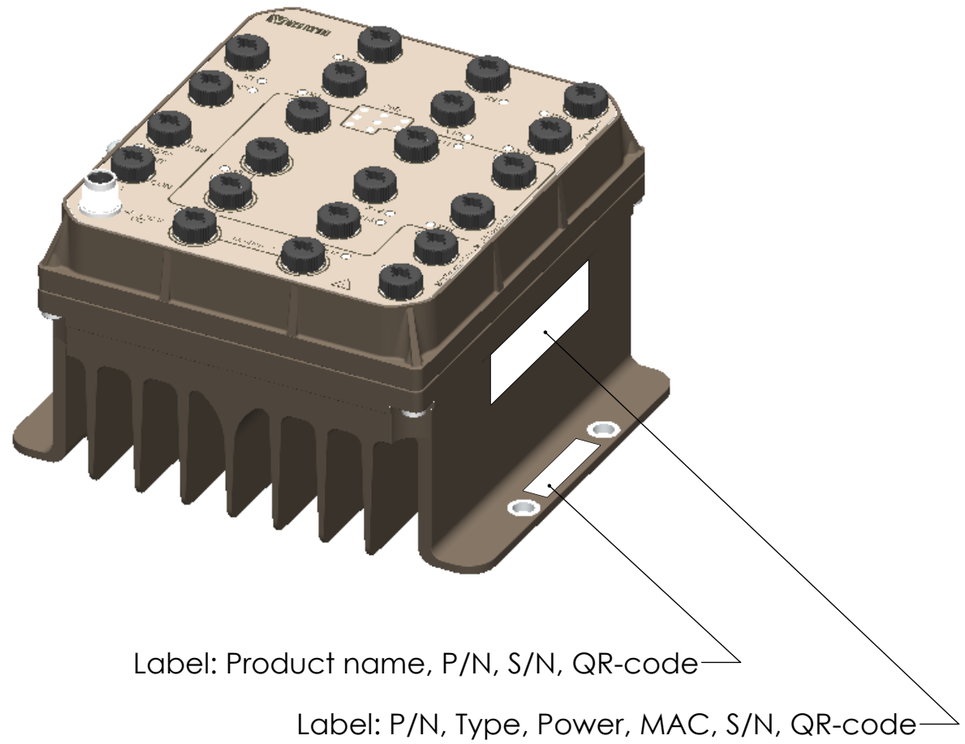

Units in millimeter (mm)

Material/Notes	Notes	Tolerance ±1,5 mm				
westermo®	Denomination: Viper 220A -T4G - P8 - HV	Designer: KTN	Approved: KLI	Date: 2016-09-01	Scale: 2:3	Sheet: 1(1)
		Drawing No.: 3635-1420-UD-03			Status: Approved	

© 2017 WestermoR&D All rights reserved