REVISIONS				
Rev	Description	Designer	Approved	Date
01	Created	KTN	KLI	2016-09-16
02	DC was PWR, 178 was 177	KTN	KLI	2016-11-16
03	Grounding point info added, Tolerances added	KTN	KLI	2017-08-15

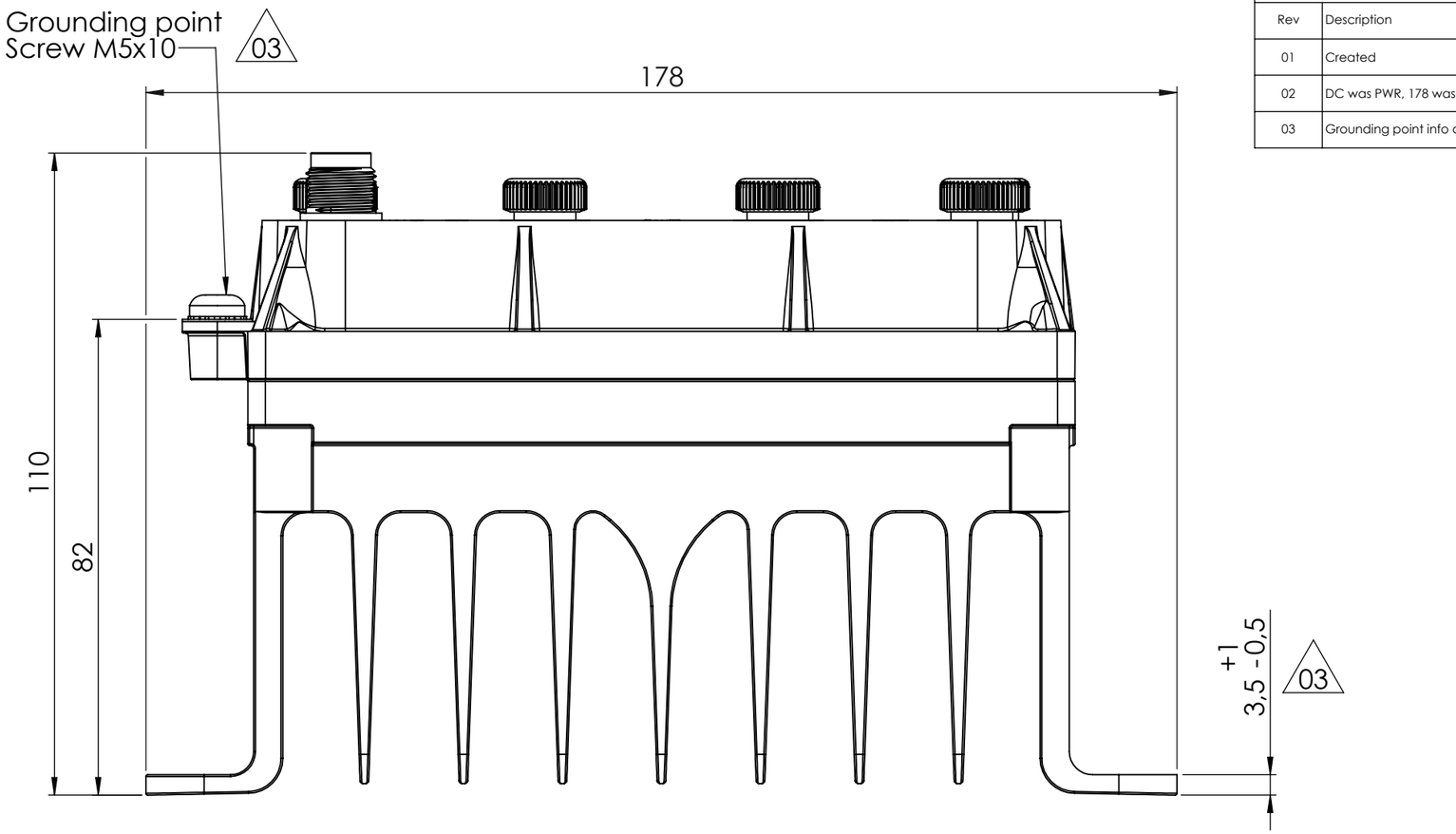

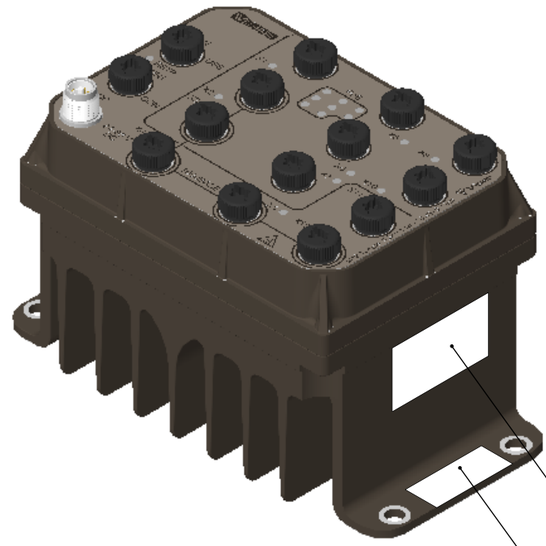

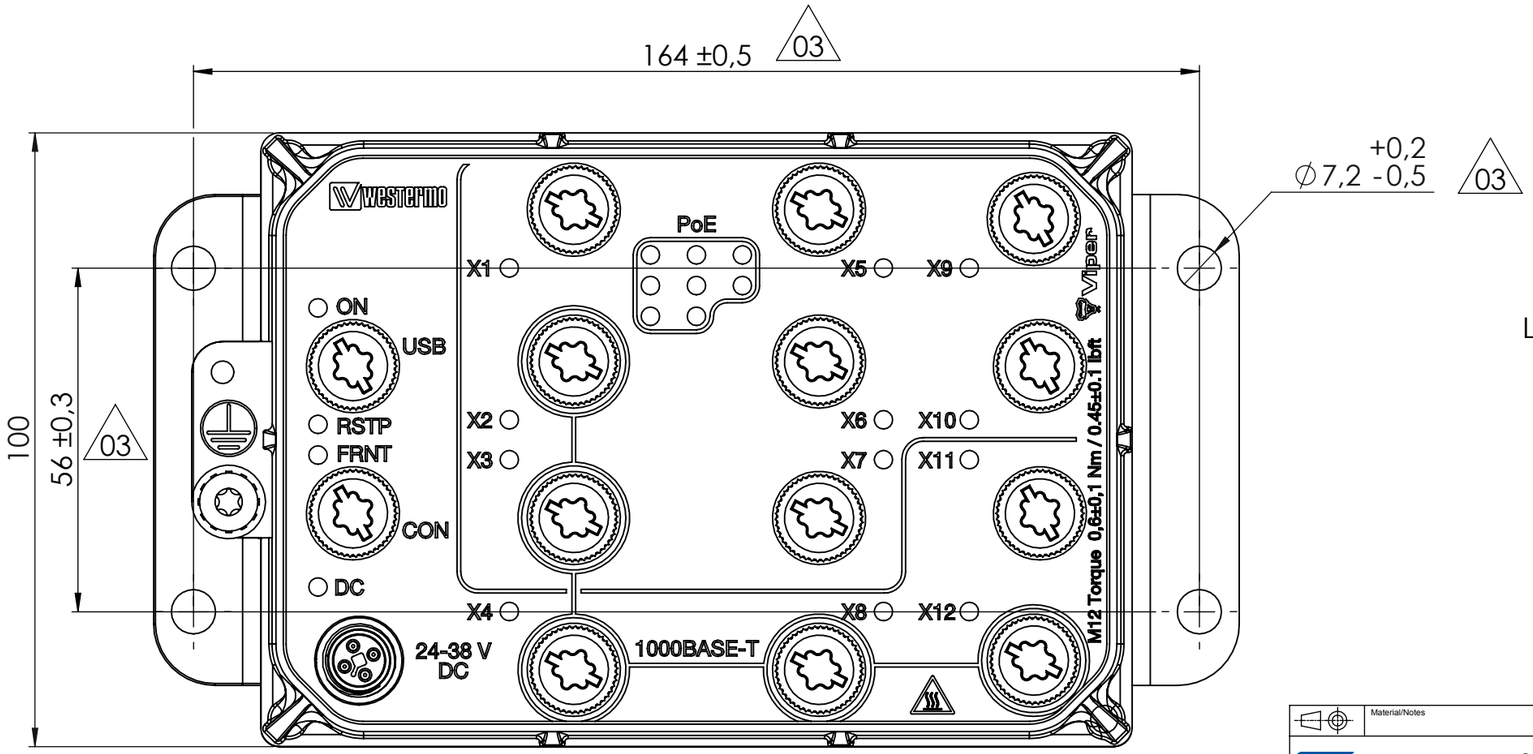

Label: Product name, P/N, S/N, QR-code

Label: P/N, Type, Power, MAC, S/N, QR-code

Units in millimeter (mm)

Material/Notes	Notes	Tolerance ±1,5 mm				
westermo	Denomination: Viper-212A-T5G-P8-LV	Designer: KTN	Approved: KLI	Date: 2016-09-16	Scale: 1:1	Sheet: 1(1)
		Drawing No.: 3635-0820-UD-03			Status: Approved	

© 2017 WestermoR&D All rights reserved